ELE214 - Electronics Laboratory I Preliminary Work 1

1 Questions

1. How can a semiconductor diode be tested for defects by means of an ohmmeter?

2. Draw the I-V characteristics of a semiconductor diode and indicate all the critical points on the plot. Explain the difference between germanium and silicon diodes, considering their I-V characteristics.

3. Design a half-wave rectifier circuit that has 220 V_{rms} AC signal with 50 Hz as input and supplies 5.40 V_{DC} to a purely resistive load. Assume that circuit elements are ideal.

4. If a capacitor is connected in parallel to the resistive load in the previous circuit, how will the ripple voltage and mean output voltage change? Plot the load voltage for one period.

5. Repeat questions 3 and 4 for the full-wave rectifier circuit.

Experimental Work (Simulation of 2-5)

1. By using an avometer, check the semiconductor diodes. Measure and record the values of V_f (forward bias voltage) and V_r (reverse bias voltage) of each diode.

2. Set up the circuit in the following figure. Observe the characteristics curve of the diode on oscilloscope and plot it. Find the value of the threshold voltage V_o.

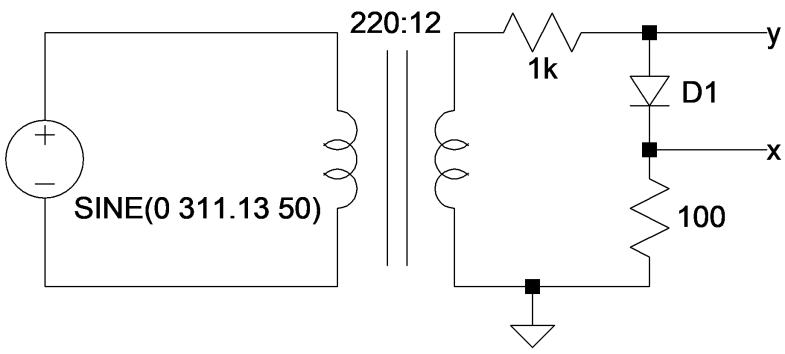

3. Set up the circuit designed in preliminary work Question 3 with using a load resistance of $R_L = 1\ k\Omega$. Observe and plot the output voltage waveform. Measure the mean values of V_o and I_o using an avometer.

4. Connect a capacitor $C_1 = 100\ \mu$F in parallel to the load of the circuit in Question 3. Observe and plot the output voltage waveform. Measure the peak to peak value of ripple voltage V_r. Measure the mean value of V_o using an avometer. Repeat for a capacitor $C_2 = 1$ mF.

5. Repeat Question 4 for the full wave rectifier designed in preliminary work.

2 Answers

1. To observe whether the diode is defective, we determine the behavior of the diode when it is forward- or reverse-biased.

At first, connect the positive lead to the anode and the negative lead to the cathode. If the meter shows a high impedance reading, the diode effectively acts as an open circuit, which is an unintended behavior.

Second, do the vice versa. If the meter shows a low impedance reading, the diode effectively acts as a short circuit, which is also unintended.

2. Let us plot the I-V characteristics of the silicon and germanium diodes and compare the differences.

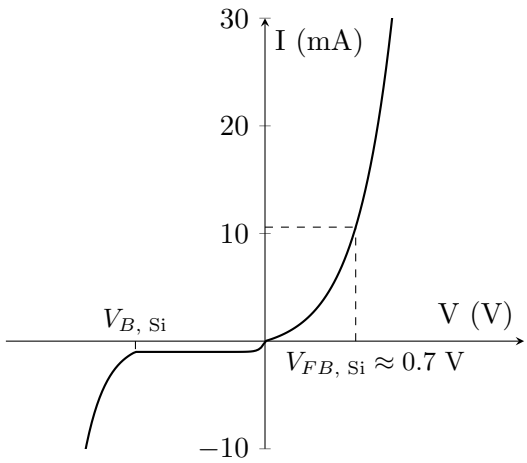

Graph 1: Silicon diode I–V characteristics

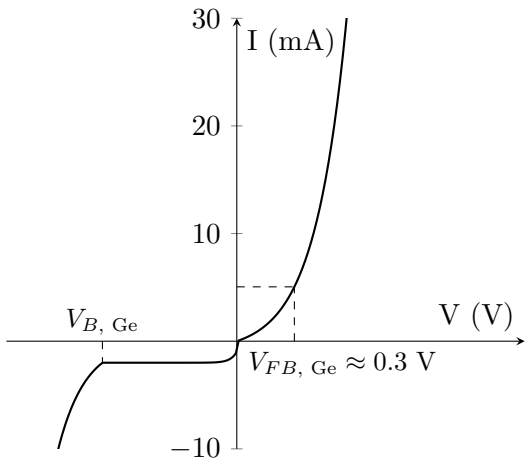

Graph 2: Germanium diode I–V characteristics

Property	**Silicon Diode (Si)**	**Germanium Diode (Ge)**
Forward voltage	≈ 0.7 V	≈ 0.3 V
Reverse leakage current	Very small (nA)	Higher (µA)
Temperature stability	Better	Poorer
Reverse breakdown tolerance	Generally higher	Generally lower

3. To obtain 5.40 V_{DC}, the peak voltage across the resistor should be π times V_{DC}.

$$V_p = 5.40 \cdot \pi$$

The diode is ideal. Therefore, the voltage across the secondary terminals of the transformer is also V_p. The peak voltage supplied by the AC signal is $220\sqrt{2}$. From the ideal transformer equation,

$$\frac{V_1}{N_1} = \frac{V_2}{N_2},$$

where $V_1 = 220\sqrt{2}$ and $V_2 = 5.40 \cdot \pi$. Substituting the numerical values, the ratio $\frac{N_1}{N_2}$ becomes

$$\frac{N_1}{N_2} = \frac{V_1}{V_2} = \frac{220\sqrt{2}}{5.40 \cdot \pi} \approx 18.34 \implies \frac{N_1}{N_2} \approx \frac{55}{3}.$$

The inductance ratio then becomes

$$\frac{L_1}{L_2} = \left(\frac{N_1}{N_2}\right)^2 = \frac{55^2}{3^2} = \frac{3025}{9}.$$

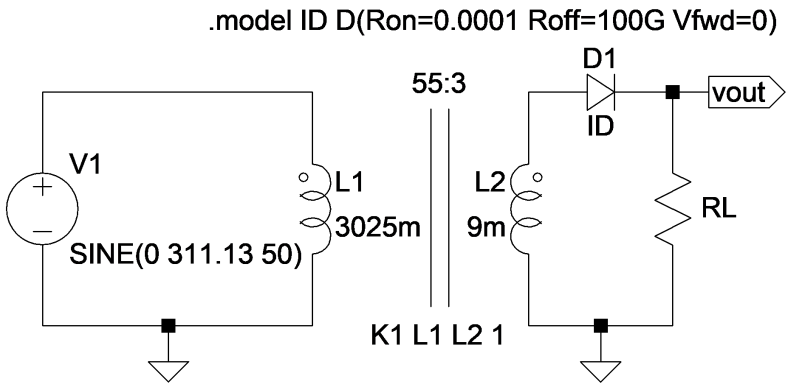

Circuit 1

4. Adding a capacitor in parallel with the resistor obviates the ripple voltage significantly. V_{out} is also higher compared to in Question 3 because the area under the V_{out} curve increases as a result of the capacitor being connected.

The circuit with $C = 0.1\ \mu\text{F}$ and $R = 1\ k\Omega$ is given.

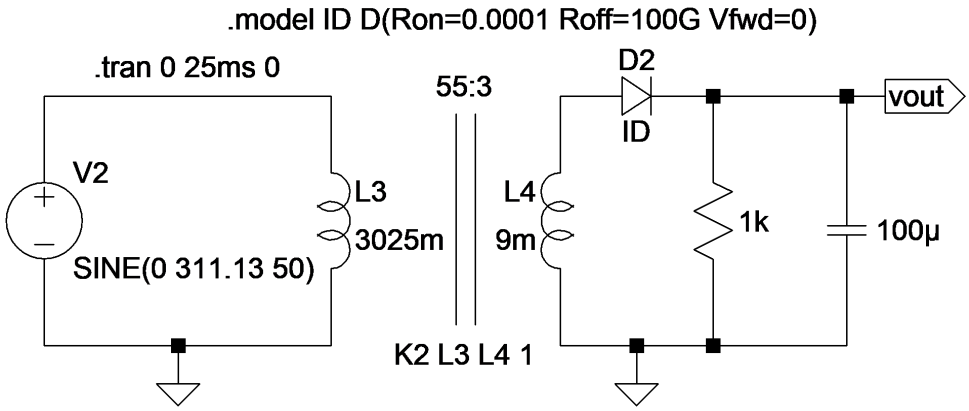

Circuit 2

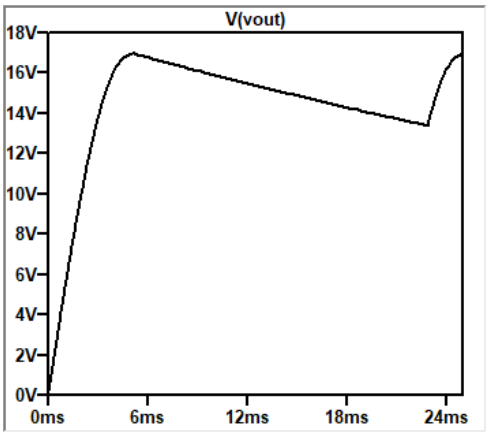

Graph 3: One-period plotting of Circuit 2

5. The peak voltage across the resistor should be $\frac{\pi}{2}$ times V_{DC} now.

$$V_p = 5.40 \cdot \pi \cdot \frac{1}{2}$$

Calculations give

$$\frac{N_1}{N_2} = \frac{V_1}{V_2} = \frac{220\sqrt{2}}{5.40 \cdot \pi \cdot \frac{1}{2}} \approx 36.68 \implies \frac{N_1}{N_2} \approx \frac{110}{3},$$

$$\frac{L_1}{L_2} = \left(\frac{N_1}{N_2}\right)^2 = \frac{110^2}{3^2} = \frac{12100}{9}$$

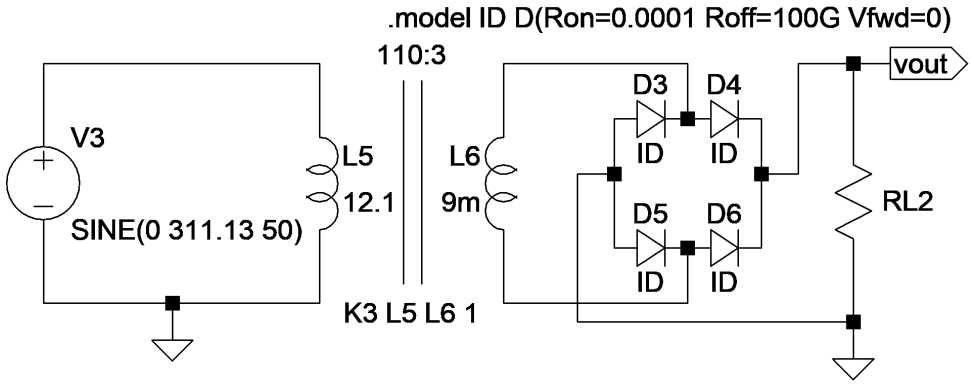

Circuit 3

The circuit with $C = 0.1\ \mu$F and $R = 1\ k\Omega$:

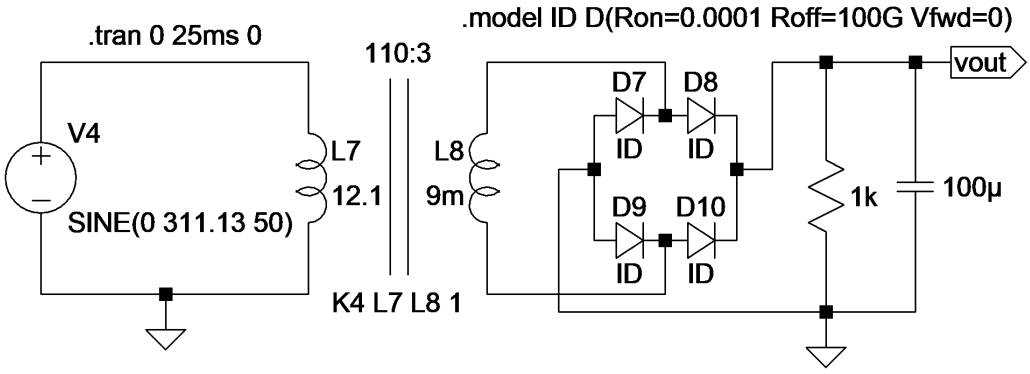

Circuit 4

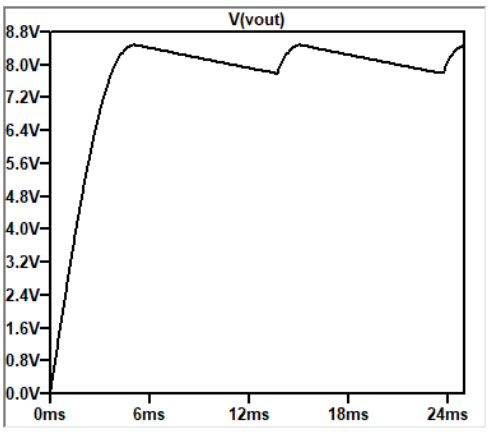

Graph 4: One-period plotting of Circuit 4

Simulation

2. The circuit and the graph of the voltage across the diode are below.

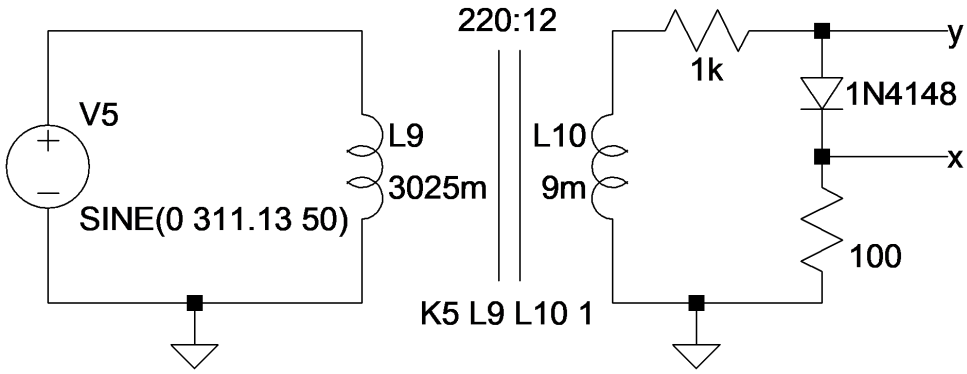

Circuit 5

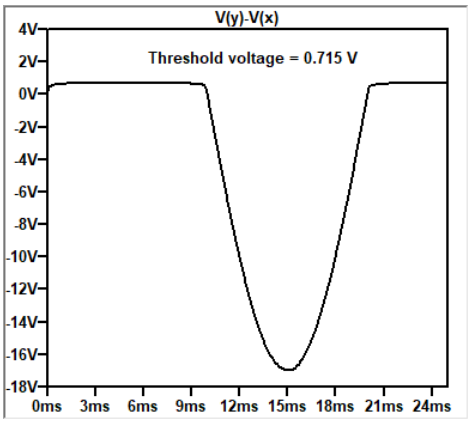

Graph 5: The voltage across the diode in Circuit 5

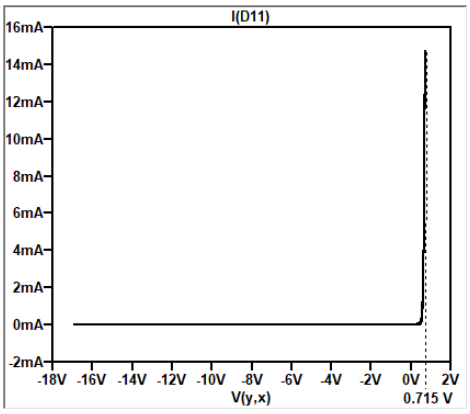

Graph 6: The I-V characteristics of the diode in Circuit 5

We can infer from the graph that the forward bias voltage may deviate from the known value.

3. The ideal diode is now replaced by a silicon diode with $V_{FB} = 0.7$ V.

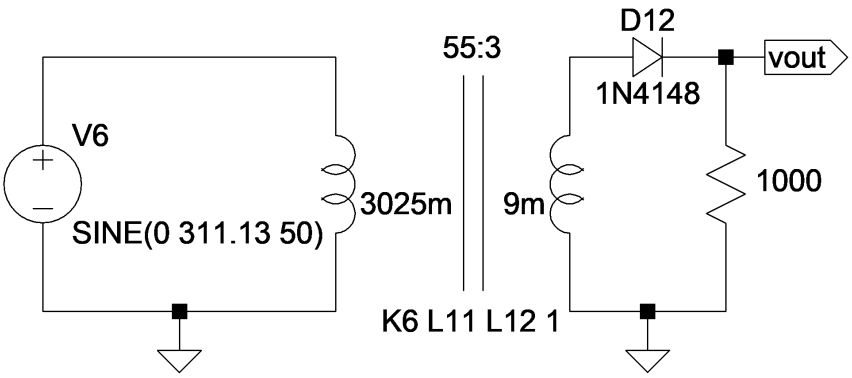

Circuit 6

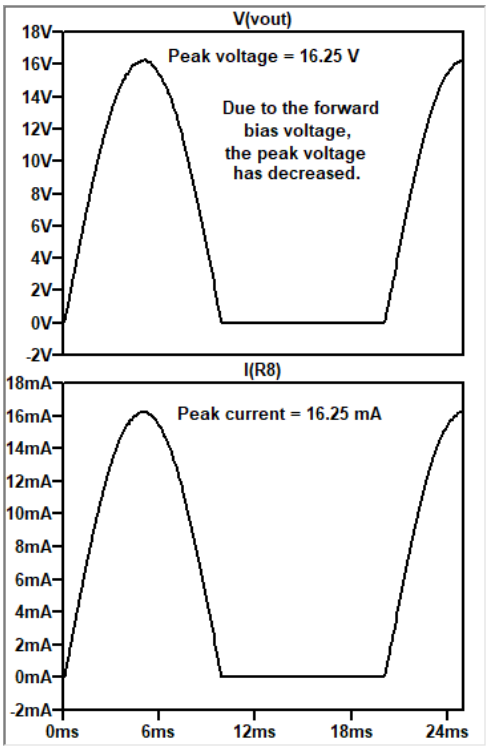

Graphs 7 and 8: The voltage across and the current through the resistor in Circuit 6

$$V_m = \frac{V_p}{\pi} = 5.17 \text{ V} \qquad I_m = \frac{I_p}{\pi} = 5.17 \text{ mA}$$

4. The circuits and the graphs are as follows.

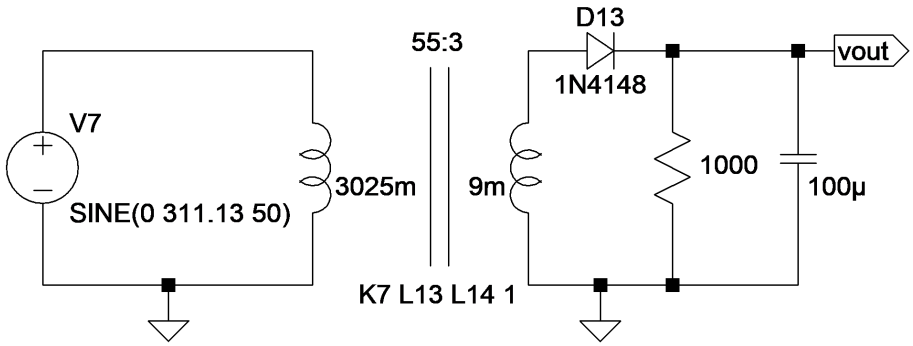

Circuit 7 with 100 μF *capacitor*

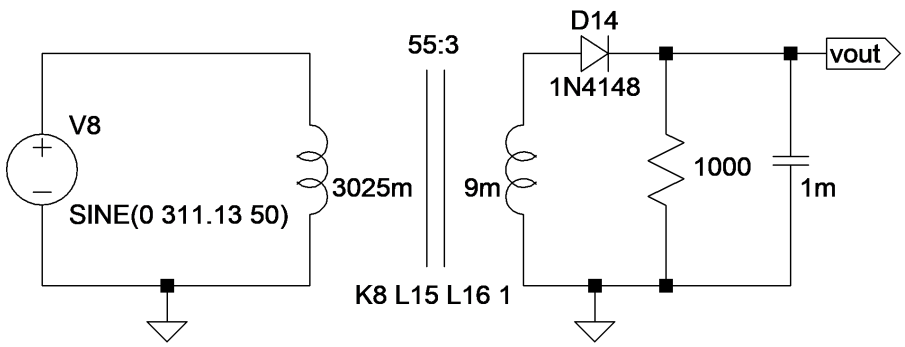

Circuit 8 with 1000 μF *capacitor*

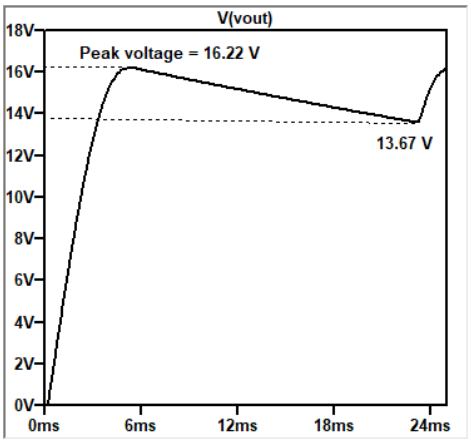

Graph 9: Circuit 7 for one period

$$V_R = 16.22 - 13.67 = 2.55 \text{ V}$$

Mean value of V_o:

$$V_o \approx V_p - \frac{V_R}{2} = 16.22 - \frac{2.55}{2} \approx 14.95 \text{ V}.$$

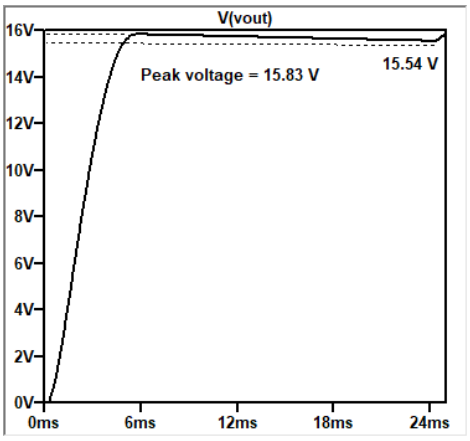

Graph 10: Circuit 8 for one period

$$V_R = 15.83 - 15.54 = 0.29 \text{ V}$$

Mean value of V_o:

$$V_o \approx V_p - \frac{V_R}{2} = 15.83 - \frac{0.29}{2} \approx 15.69 \text{ V}.$$

5. The circuits and the graphs are as follows.

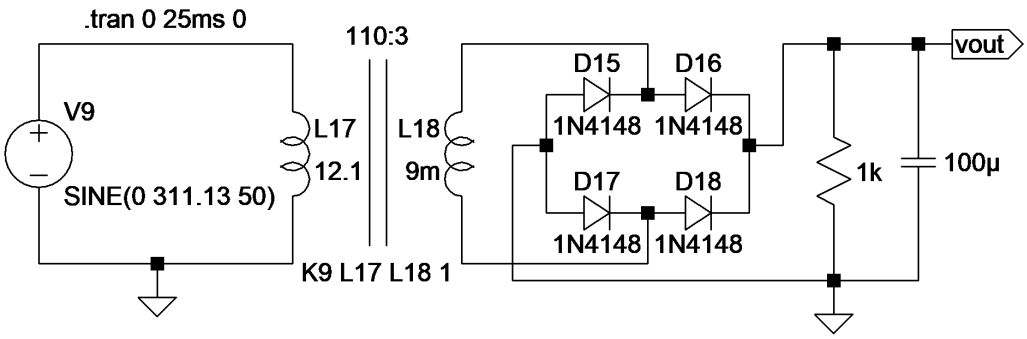

Circuit 9 with 100 μF *capacitor*

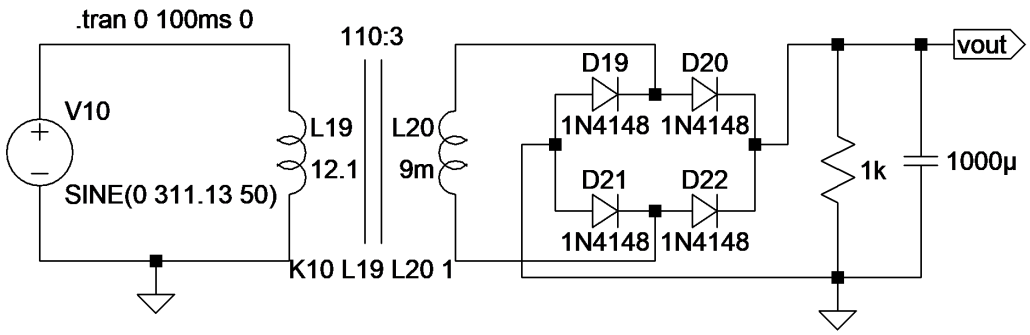

Circuit 10 with 1000 μF *capacitor*

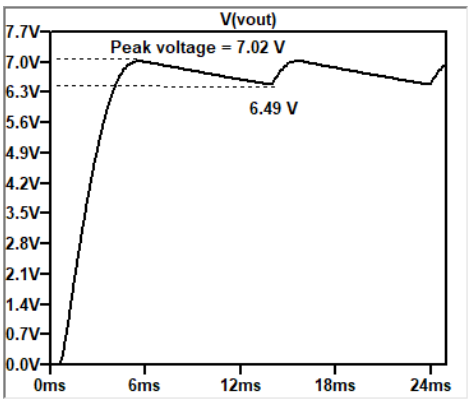

Graph 11: Circuit 9 for one period

$$V_R = 7.02 - 6.49 = 0.53 \text{ V}$$

Mean value of V_o:

$$V_o \approx V_p - \frac{V_R}{2} = 7.02 - \frac{0.53}{2} \approx 6.76 \text{ V}.$$

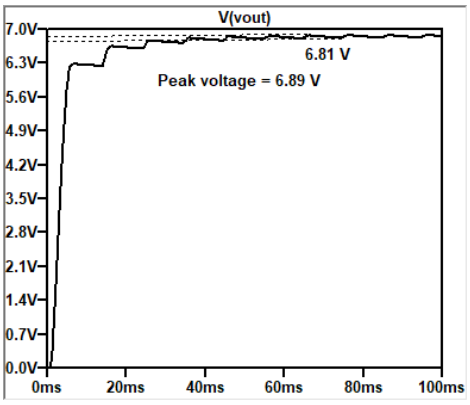

Graph 12: Circuit 10 for four periods

$$V_R = 6.89 - 6.81 = 0.08 \text{ V}$$

Mean value of V_o:

$$V_o \approx V_p - \frac{V_R}{2} = 6.89 - \frac{0.08}{2} = 6.85 \text{ V}.$$